EURO • Printed in Germany • BA 3 609 929 804 • GNF 20/35 CA • Titel (Vorderseite) • OSW 05/01

Bedienungsanleitung
Operating Instructions
Instructions d'emploi
Instrucciones de servicio
Manual de instruções
Istruzioni d'uso
Gebruiksaanwijzing
Betjeningsvejledning
Bruksanvisning
Brukerveiledningen
Käyttöohje
Οδηγία χειρισμού
Kullanım kılavuzu

BOSCH

GNF 20 CA
GNF 35 CA

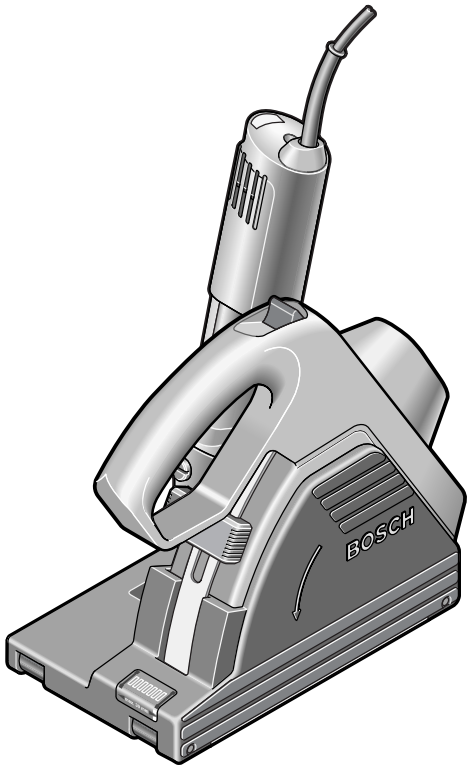

Deutsch
English
Français
Español
Português
Italiano
Nederlands
Dansk
Svenska
Norsk
Suomi
Ελληνικά
Türkçe

Downloaded from www.Manualslib.com manuals search engine

UPP	professional plus	
BPP	professional plus	
HPP	professional plus	
APP	professional plus	Asphalt
UP	professional	
UP-T	professional	

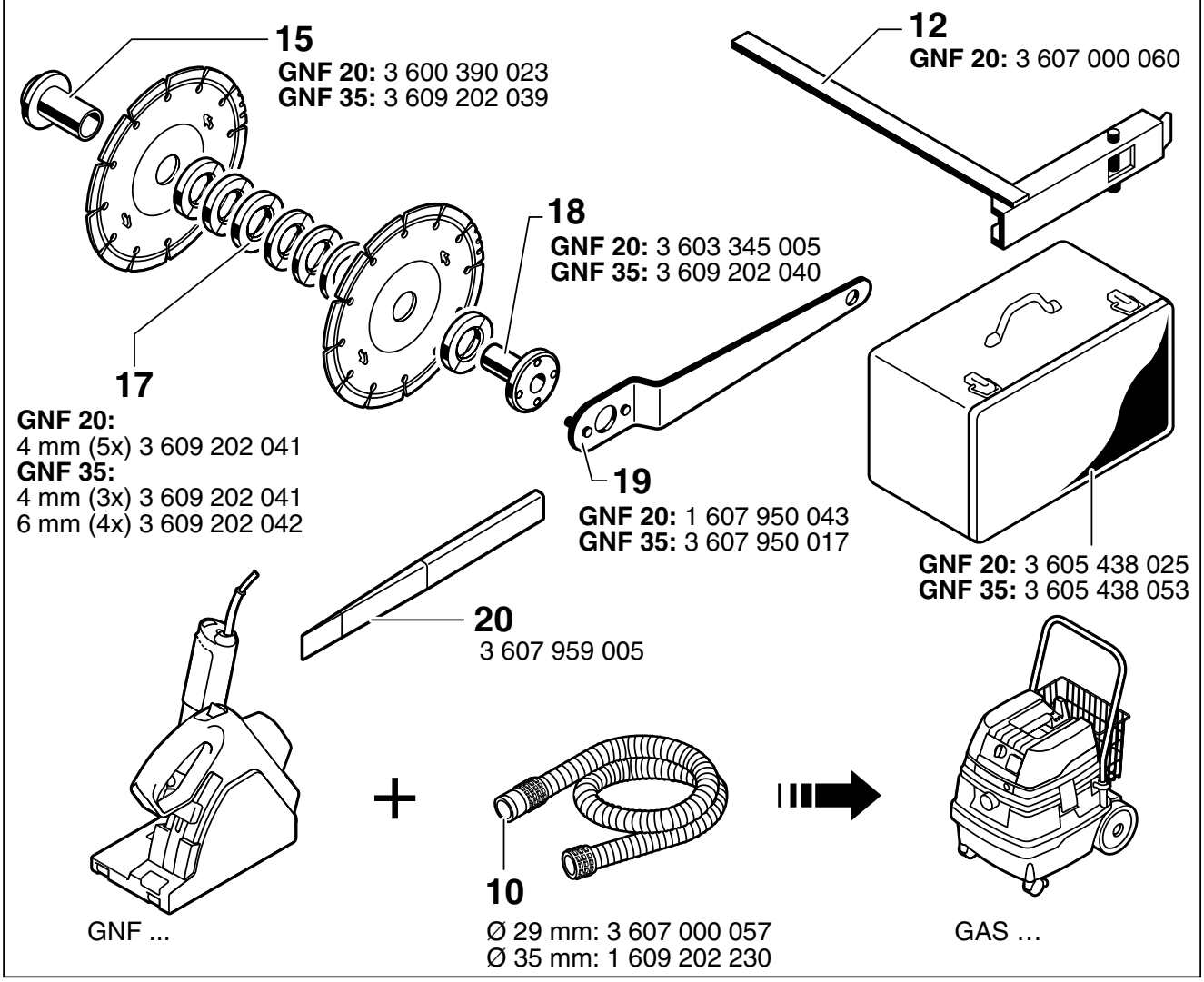

Downloaded from www.Manualslib.com manuals search engine

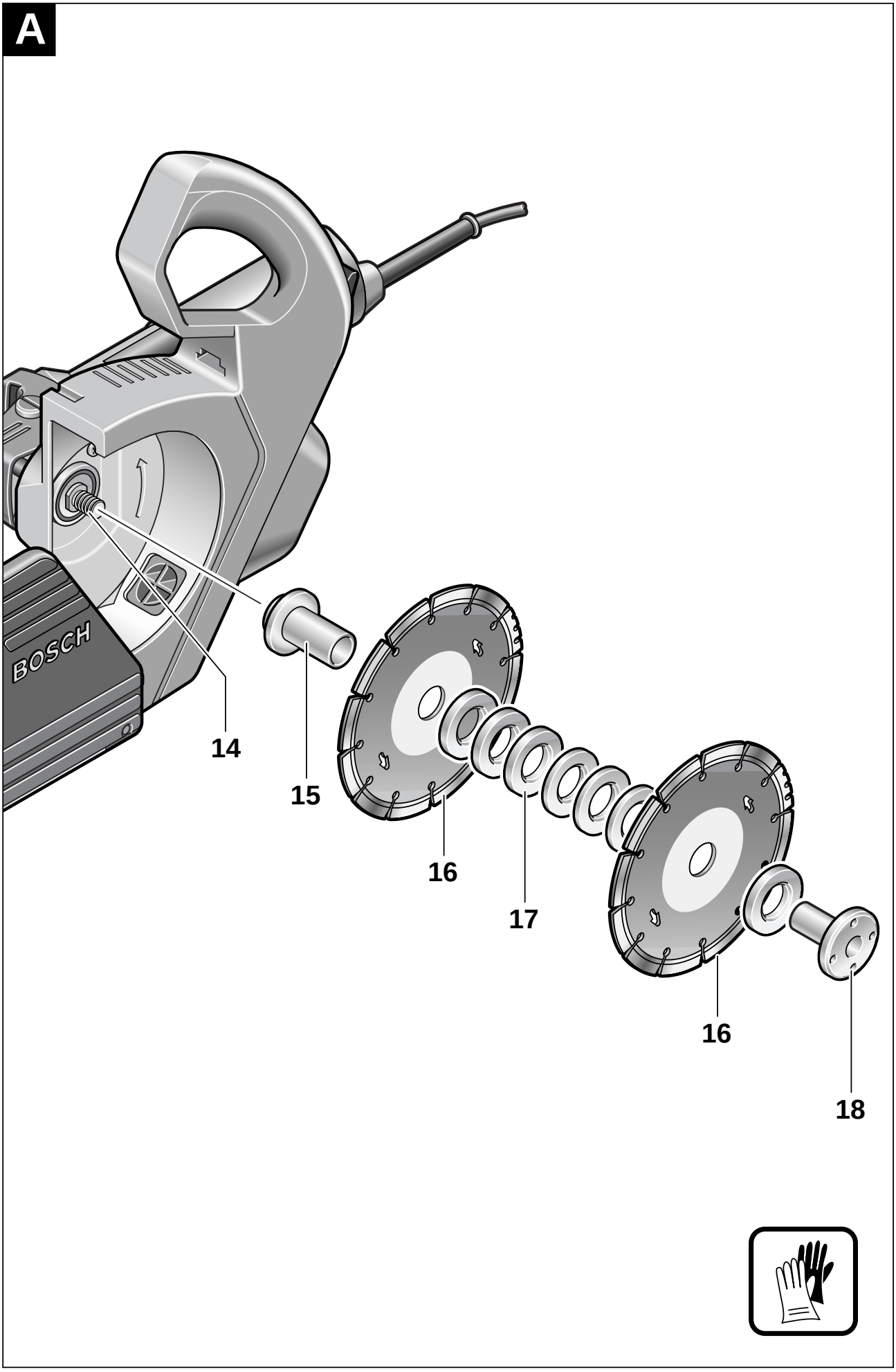

Downloaded from www.Manualslib.com manuals search engine

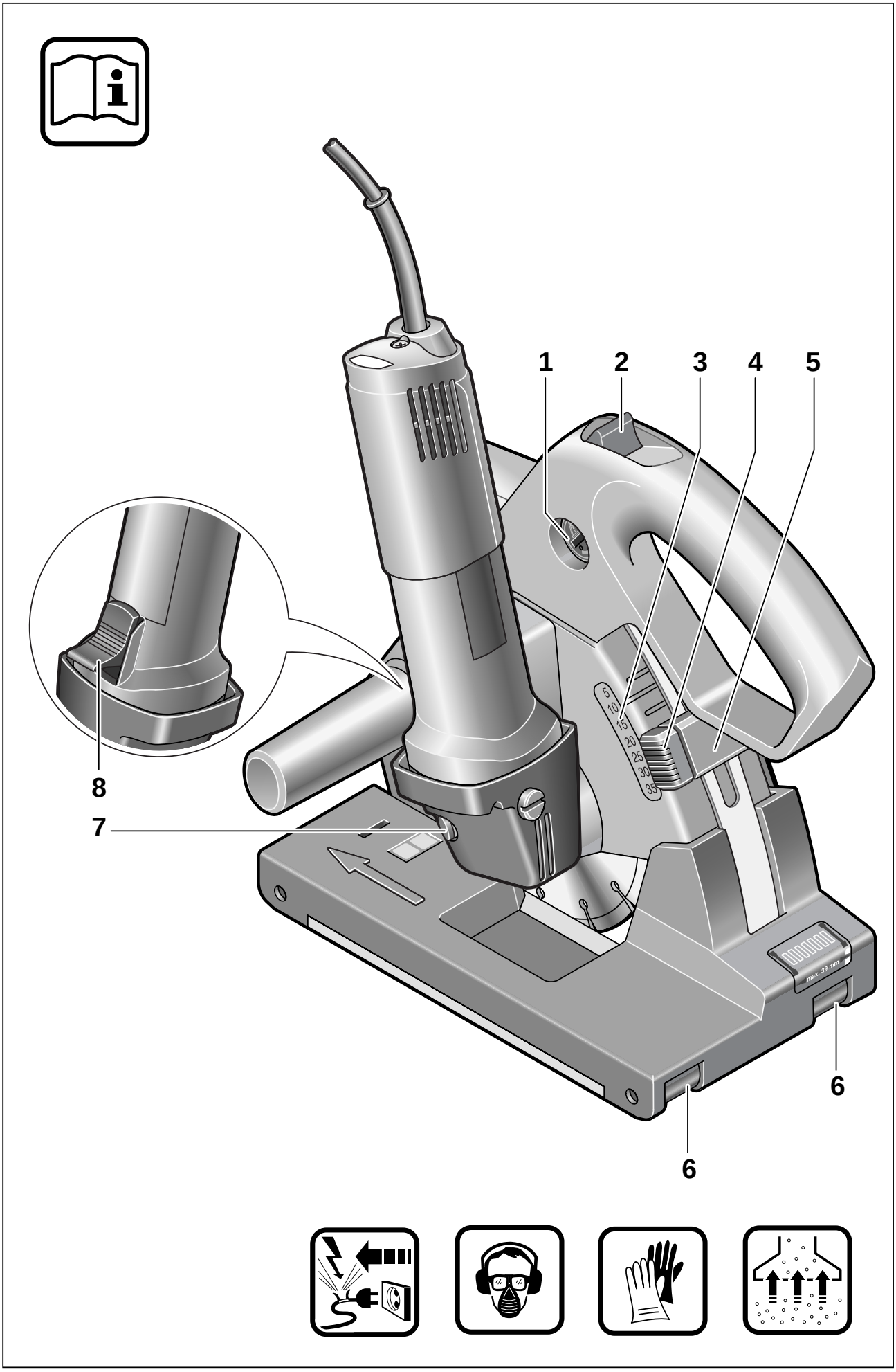

Downloaded from www.Manualslib.com manuals search engine

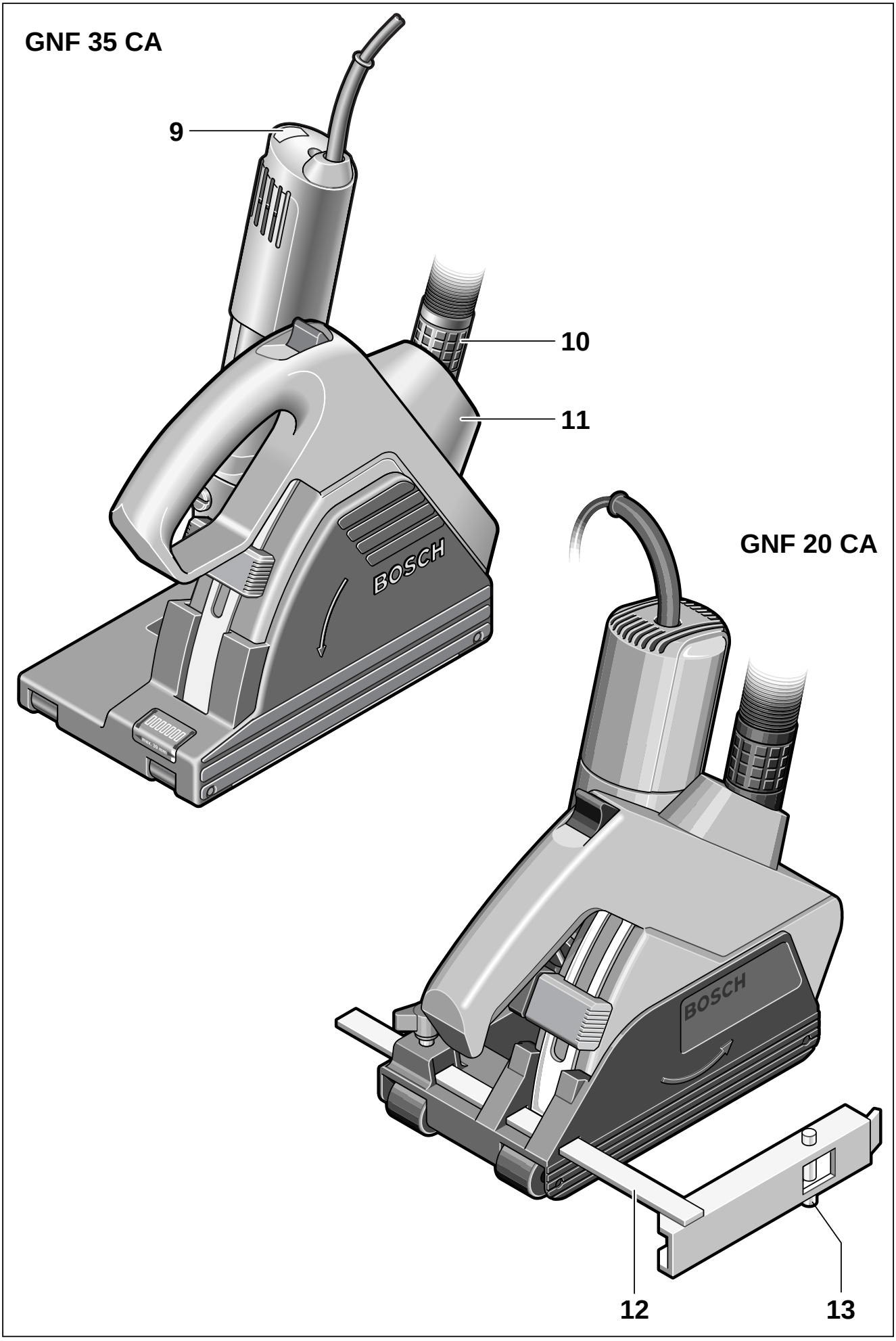

Downloaded from www.Manualslib.com manuals search engine

Tool Specifications

Wall chasing machine	GNF 20 CA	GNF 35 CA
Part number	0 601 612 5..	0 601 621 7..
Rated power	900 W	1 400 W
Output power	520 W	750 W
No-load speed	9 300 rpm	9 300 rpm
Diamond cutting discs Ø	max. 115 mm	max. 150 mm
Mounting hole	22.2 mm	22.2 mm
Slot depth	0 – 20 mm	0 – 35 mm
Slot width	7 – 23 mm	7 – 39 mm
Weight (without optional extras) approx.	2.8 kg	4.1 kg
Safety class	⧈ / II	⧈ / II

Machine Elements

1 Release lock
2 Release button for the cutting unit
3 Cutting depth scale
4 Release button for the depth stop
5 Depth stop
6 Chaser rollers
7 Spindle lock
8 On/Off switch
9 Service indicator (GNF 35 CA)
10 Vacuum hose*
11 Vacuuming connection piece
12 Parallel guide* (GNF 20 CA)
13 Guide bolt (GNF 20 CA)
14 Grinder spindle
15 Mounting flange
16 Diamond cutting disc*
17 Spacers
18 Clamping nut
19 Two-pin spanner for clamping nut
20 Break-out tool

* Optional accessories

* **Not all of the accessories illustrated or described are included as standard delivery.**

For Your Safety

Working safely with this machine is possible only when the operating and safety information are read completely and the instructions contained therein are strictly followed. In addition, the general safety instructions in the enclosed booklet must be followed. Before using for the first time, ask for a practical demonstration.

If the mains cable is damaged or cut through while working, do not touch the cable but immediately pull the mains plug. Never use the machine with a damaged cable.

Wear protective goggles, ear protection and a dust protection mask.

Wear protective gloves and sturdy shoes.

When necessary, also wear an apron.

- When working with the machine, always hold it firmly with both hands and provide for a secure stance.
- Always direct the cable to the rear away from the machine.
- Connect machines that are used in the open via a residual current device (RCD) with an actuating current of 30 mA maximum. Use only extension cables that are approved for outdoor use.

Downloaded from www.Manualslib.com manuals search engine

- Insert the mains plug only when the machine is switched off.
- Do not clamp the machine in a vice.
- Always switch off the machine and allow to come to a stop before placing it down.
- Do not work with materials containing asbestos.
- Only use diamond cutting discs with a maximum permissible speed that is at least as high as the no-load speed of the machine.
- Check the diamond cutting discs before use. The diamond cutting discs must be mounted in exact alignment and be able to rotate freely. Carry out a test run for at least 30 seconds without any load. Do not use any diamond cutting discs that are damaged, out-of-balance, or vibrate.
- Observe the dimensions of the diamond cutting discs. The hole diameter must fit the mounting flange **15**. Do not use any reduction parts or adapters.
- Protect diamond cutting discs against impact, shock and grease.
- Apply the machine to the workpiece only when switched on.
- Keep hands away from the rotating diamond cutting disc.
- Pay attention to the direction of rotation. Always hold the machine so that sparks and grinding dust fly away from the body.
- Be careful when cutting grooves, e. g. in load-carrying walls: See information on structures.
- **Do not drill, fasten or cut into blind areas where electric, gas or water lines may exist. Use appropriate detectors to determine if these lines are hidden in the work area or call the local utility company for assistance.**
  Contacting electric lines may cause fire or electric shock. Striking a gas line will probably result in explosion. Breaking into a water pipe will cause property damage or may cause an electric shock.
- Caution! Sparks can also reach combustible materials that are covered.
- Blocking the cutting disc leads to jerking reaction forces on the machine. In this case switch off the machine immediately.
- Observe the manufacturer's instructions for mounting and operating the diamond cutting discs.
- Caution! Diamond cutting discs do not stop running immediately when the machine is turned off. Do not exert any pressure against the side of the diamond cutting discs.
- The machine must be operated only with dust extraction. In addition, wear a dust mask. The vacuum cleaner must be approved for the extraction of masonry dust.
- Caution! Diamond cutting discs become very hot during operation; do not touch them before they have cooled down.
- Never allow children to use the machine.
- Bosch is only able to ensure perfect functioning of the machine if the original accessories intended for it are used.

Information Structures

Slots in load carrying walls are subject to the Standard DIN 1053, Part 1 or country-specific regulations.

These regulations are to be observed under all circumstances. Before beginning work, consult the responsible structural engineer, architects or the construction supervisor.

The permitted slot depth and width depends on the slot length, wall thickness and the used building material.

Intended Use

With a firm support of the cutting guide, the machine is intended to cut or slot mainly mineral materials such as reinforced concrete, brickwork and road surfaces without the use of water.

Downloaded from www.Manualslib.com manuals search engine

Changing the Tool

- **Before any work on the machine itself, pull the mains plug.**
- **Wear protective gloves.**
- **Use only diamond cutting discs suitable for dry cutting of the material with an allowable speed matching at least the no-load speed of the machine.**

Swiveling out the cutting unit

For tool change, the cutting unit must be swiveled out completely.

Place the machine on a firm surface. Turn the release lock **1** to the left, using e. g. the spanner end of the two-pin spanner **19**.

⚠ **This releases the cutting unit and immediately swivels it upwards by means of resiliance.**

A Removing the clamping assembly

With the spindle locking button **7**, lock the grinder spindle (only when the grinder spindle is at a standstill!).

Loosen the clamping nut **18** using the two-pin spanner **19** and unscrew it. Remove the spacer discs **17** and the mounting flange and clean the clamping parts.

Determining the slot width

The slot width results from the amount of spacer discs between the two diamond cutting discs **16** and the cutting width of the diamond cutting discs.

The slot width is calculated as follows:
Slot width = Thickness of the spacer discs + width of the diamond cutting discs (4 mm).

The allowable slot width is shown in the section “Tool Specifications”.

The machine may only be operated with one or two diamond cutting discs.

A Mounting the clamping assembly

Place the mounting flange **15** onto the tool spindle **14**. The mounting flange **15** with its driving feature must be properly seated on the tool spindle.

Place the diamond cutting disc **16** and the spacer discs **17** on the mounting flange **15**.

Regardless of the required slot width, all spacer discs **17** included in the delivery must be mounted.

At least one spacer disc **17** must be mounted between two diamond cutting discs **16**.

When assembling the diamond cutting discs, ensure that the direction-of-rotation arrows on the diamond cutting discs match with the direction-of-rotation arrow on the housing.

Screw on the clamping nut **18** and tighten with the two-pin spanner **19**.

Swivel the cutting unit back again. Check the locking system of the cutting unit.

☞ When working with 2 diamond cutting discs always replace them in pairs.

Cutting Depth Pre-Selection

Press the release button **4** at the depth stop **5** and push the depth stop to the required cutting depth. The cutting depth scale **3** can be used as a reference for this.

Let go of the release button **4** again.

Ensure that the depth stop **5** is engaged.

Downloaded from www.Manualslib.com manuals search engine

Dust Extraction

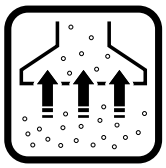

The machine must be operated only with dust extraction. The vacuum cleaner must be approved for the extraction of masonry dust.

In case of a malfunction of the dust extraction system, stop working, switch the machine off and correct the malfunction of the dust extraction system.

The machine can be plugged directly into the receptacle of a Bosch general-purpose vac with remote starting control. The vac starts automatically when the machine is switched on.

The vacuum cleaner must be suitable for the material to be worked.
When vacuuming dry dust that is especially detrimental to health or carcinogenic, use a special vacuum cleaner.
Bosch offers suitable vacuum cleaners for all materials to be worked.

For dust extraction using an external vacuum cleaner, a suction adapter must be used in this case (see accessories). Insert the suction adapter and suction hose fixture firmly.

Initial Operation

Check for correct mains voltage: The voltage of the power source must agree with the voltage specified on the nameplate of the machine. Equipment marked with 230 V can also be connected to 220 V.

☞ **The cutting unit must have engaged in the uppermost position before the machine is switched on, so that the diamond cutting discs do not touch the workpiece.**

Switching on and off

Switching on: Slide the On/Off switch **8** forward and press down to the front until it latches.

Switching off: Press down the On/Off switch **8** to the rear - the switch springs to the off position.

☞ Check the diamond cutting discs before use. The diamond cutting discs must be mounted in exact alignment and be able to rotate freely. Carry out a test run for at least 30 seconds without any load. Do not use any diamond cutting discs that are damaged, out-of-balance, or vibrate.

Starting Current Limiting

As a result of soft starting, a 13-A fuse is adequate.

Constant Electronics

The constant speed electronics hold the speed at no-load and when under load nearly constant and ensure uniform working performance.

Overload Protection

When overloaded, the motor comes to a stop. Relieve the load on the machine immediately and allow to cool for approx. 30 seconds at the highest no-load speed.

Restarting Protection (GNF 35 CA)

Prevents uncontrolled restarting of the machine after an interruption in the mains supply.

The mains supply remains interrupted and the service indicator **9** lights up.

Restarting operation: Switch the On/Off switch **8** to the Off position and start the machine again.

Downloaded from www.Manualslib.com manuals search engine

Operating Instructions

Wear protective goggles, ear protection and a dust protection mask.

Wear protective gloves and sturdy shoes.

- **The machine may only be used for dry machining of masonry.**

Pre-select the cutting depth, as described in the same-named section.

Note: To compensate inaccuracies that occur when breaking away the fins, the cutting depth must be set approx. 3 mm deeper than the required slot depth.

Place the machine with the chaser rollers **6** on the surface to be worked. The cutting unit must be in the uppermost position.

Switch the machine on.

Press the release button **2** upwards to release the cutting unit. Slowly lower and plunge the cutting unit into the material.

Always guide the machine with both handles.

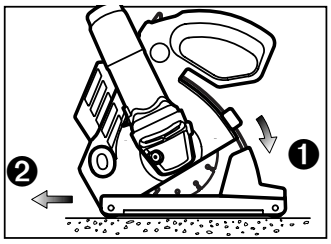

Work with moderate feed, suited to the material being worked, while paying attention to the cutting direction!

Important is the direction in which cutting is performed.

The machine must always work opposite to the direction of rotation. Therefore, never move the machine in the other direction! Otherwise, the danger exists of it being pushed **uncontrolled** out of the cut.

The machine can be both pushed or pulled in the cutting direction. Vertical slots can easily be cut by pulling the machine from top to bottom.

After finishing the working procedure, swivel the cutting unit out of the slot with the machine still running, until the cutting unit engages in the uppermost position.

Switch the machine off.

Do not brake coasting cutting disks with side pressure.

- **Caution! Diamond cutting discs become very hot during operation; do not touch them before they have cooled down.**

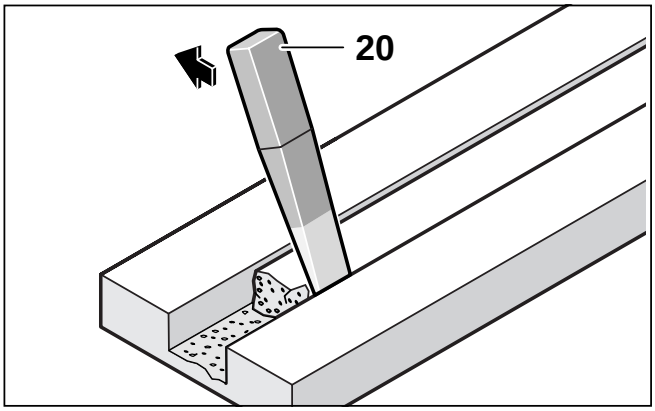

Remove the remaining fin of the material with the break-out tool **20**, included in the delivery.

Curved cuts are not possible, as the diamond cutting discs could jam in the material.

When cutting through plate materials, ensure that the materials are firmly backed on a surface or supported.

When breaking through walls, e. g. with a rotary hammer, the chipping off of the surface material can be widely avoided when a slot with maximum cutting depth is cut in first.

☞ For cutting especially hard material, e. g., concrete with high gravel content, the diamond cutting disc can overheat and become damaged as a result. This is indicated clearly by a ring of sparks that rotates with the diamond cutting disc.

In this case, interrupt the cutting process and allow the diamond cutting disc to cool by running frely at no-load speed for a short time.

Noticeable decreasing work progress and a rotating spark ring are indications of a diamond cutting disc that has become dull. With brief cuts in an abrasive material (e. g., chalky sand stone), it can be sharpened again.

Downloaded from www.Manualslib.com manuals search engine

Parallel Guide (Optional extra, GNF 20 CA)

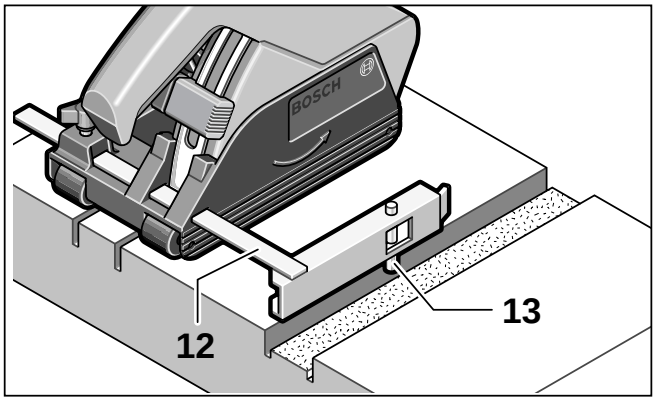

To cut additional parallel slots, press the guide bolt **13** of the parallel guide **12** down into the already cut slot and carry out the cutting procedure.

Maintenance and Cleaning

- **Before any work on the machine itself, pull the mains plug.**

☞ For safe and proper working, always keep the machine and the ventilation slots clean.

After finishing work, disassemble the diamond cutting discs and clean the clamping parts and the protective cover.

If the machine should fail despite the care taken in manufacturing and testing procedures, repair should be carried out by an authorized after-sales service centre for Bosch power tools.

In all correspondence and spare parts orders, please always include the 10-digit order number given on the nameplate of the machine.

WARNING! Important instructions for connecting a new 3-pin plug to the 2 wire cable.

The wires in the cable are coloured according to the following code:

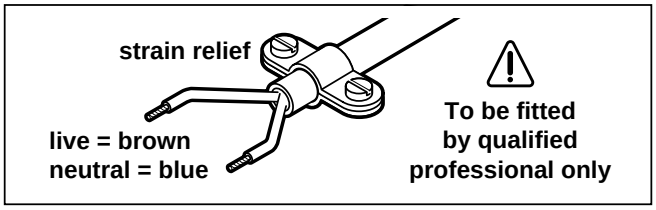

Do **not** connect the blue or brown wire to the earth terminal of the plug.

Important: If for any reason the moulded plug is removed from the cable of this machine it must be disposed of safely.

Service Indicator 9 (GNF 35 CA)

When the carbon brushes are worn out, the machine switches itself off. This is indicated approx. eight hours beforehand by the lighting or blinking of the service indicator **9**. The machine must then be sent to customer service for maintenance (for addresses, see Section “Service and Customer Assistance”).

Guarantee

We guarantee Bosch appliances in accordance with statutory/country-specific regulations (proof of purchase by invoice or delivery note).

Damage attributable to normal wear and tear, overload or improper handling will be excluded from the guarantee.

In case of complaint please send the machine, **undismantled**, to your dealer or the Bosch Service Centre for electric power tools.

Noise/Vibration Information

Measured values determined according to EN 50 144 (lime-sand brick).

Typically the A-weighted noise levels of the product are: sound pressure level: 97 dB (A); sound power level: 110 dB (A).

Wear ear protection!

The typical weighted acceleration is 4 m/s^2.

Downloaded from www.Manualslib.com manuals search engine